Switching Power Supplies

BAE PS-XA-1S-24-100-103
Order Code: BAE00LJ

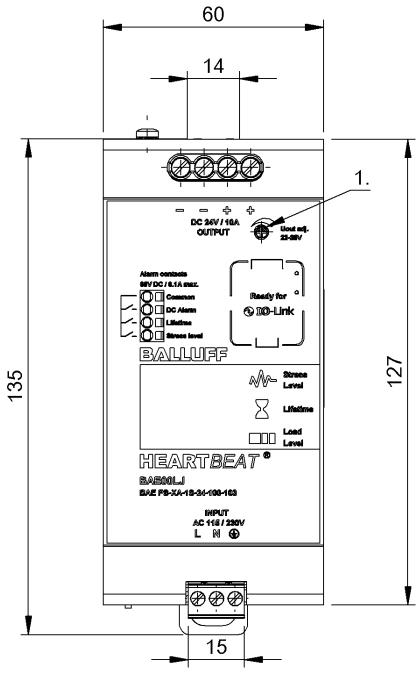

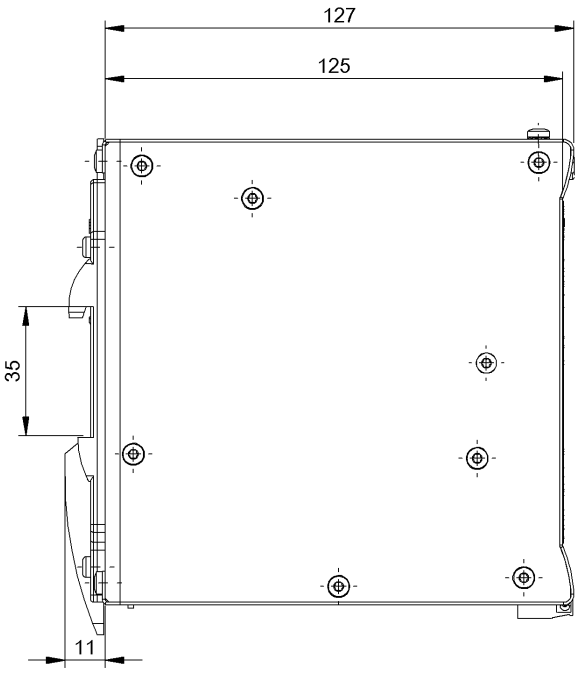

1) Potentiometer

Basic features

Approval/Conformity	CE cURus cULus WEEE
Basic standard	EN 61204 IEC 60950-1 UL 60950-1 EN 60950-1 UL 508 CSA 22.2 No. 107.1
Series	Heartbeat
Short description	Switching power supply
Version	DIN rail

Electrical connection

Connection (supply voltage IN)	Terminal strip
Connection (supply voltage OUT)	Terminal strip
Connection alarm	Opto-relay with "Common" contact
Connector supply voltage IN, type	Terminal strip
Connector supply voltage OUT, type	Terminal strip
Interconnected operation type	Series wiring: max. 2 devices Parallel wiring: not possible
Polarity reversal protected	yes
Short-circuit protection	continuous short circuit protection

Switching Power Supplies

BAE PS-XA-1S-24-100-103
Order Code: BAE00LJ

Electrical data

Current alarm max.	150 mA
Derating	-3.5 %/°C > +60 °C
Display	Lifetime Load Level Stress Level
Efficiency typ.	93.5 %
Hold-up time	≥ 40 ms at 230 V AC ≥ 30 ms at 115 V AC
Idle running losses	2.1 W at 115 V/230 V
Input fuse	T 6.3 A internal
Input voltage	90...132 V AC 198...264 V AC
Input/output insulation voltage	3000 V AC
Inrush current	≤ 15 A at 115 V AC ≤ 20 A at 230 V AC
Isolation resistance	≥ 100 MOhm
Load control	±0.5 %
Output capacity max.	240 W
Output current max.	15 A for max. 4s 1x/min.
Output rating	240 W
Output voltage	24 VDC
Output voltage, tolerance	±1 %
Power boost	150 %
Power boost, duration max.	4 s
Protection class	I (IEC 61140)
Rated input current	3.0 A at 230 V AC 5.0 A at 115 V AC
Rated output current	10 A
Residual ripple max.	50 mVpp/10 mVrms
Setting range	22...28 V DC
Settling time	2 ms
Switching frequency	115000 Hz
Turn-on time max.	1 s
Voltage alarm max.	60 V DC/30 V AC
Voltage control	±0.5 %
Working frequency	47...63 Hz

Environmental conditions

Ambient temperature	-25...70 °C
Contamination scale	2
Cooling	Free convection
IP rating	IP20
Over temperature	not protected
Relative humidity	5...95 %, non-condensing
Storage temperature	-25...85 °C
Temperature coefficient max.	±0.03 %/K

Functional safety

MTTF (40 °C)	67.5 a

Material

Housing material	Aluminium

Mechanical data

Dimension	60 x 127 x 127 mm
Mounting part	DIN rail mount
Weight	0.85 kg

Remarks

Values measured at +25 °C and full load.

For more information about MTTF and B10d see MTTF / B10d Certificate

Indication of the MTTF- / B10d value does not represent a binding composition and/or life expectancy assurance; these are simply experiential values with no warranty implications. These declared values also do not extend the expiration period for defect claims or affect it in any way.

Wiring Diagrams (Schematic)

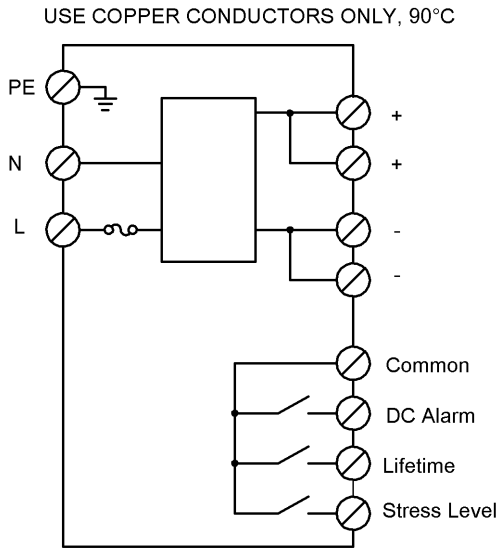

Help Views

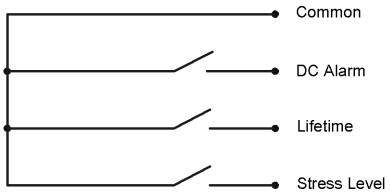

Potential-free alarm contacts

Derating curve

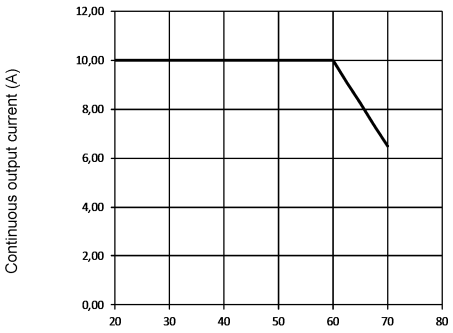

Efficiency 115/230 V AC

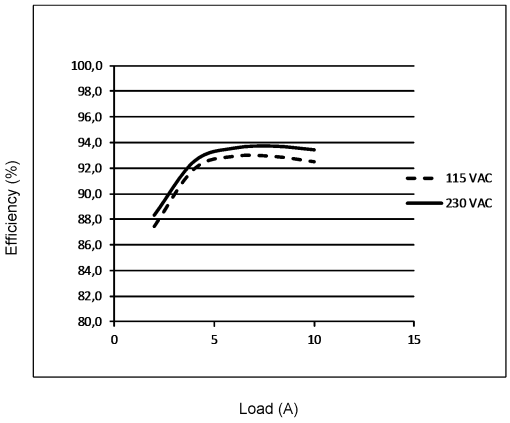

Load lines

