Switching Power Supplies

BAE PS-XA-1W-24-150-608-I
Order Code: BAE012M

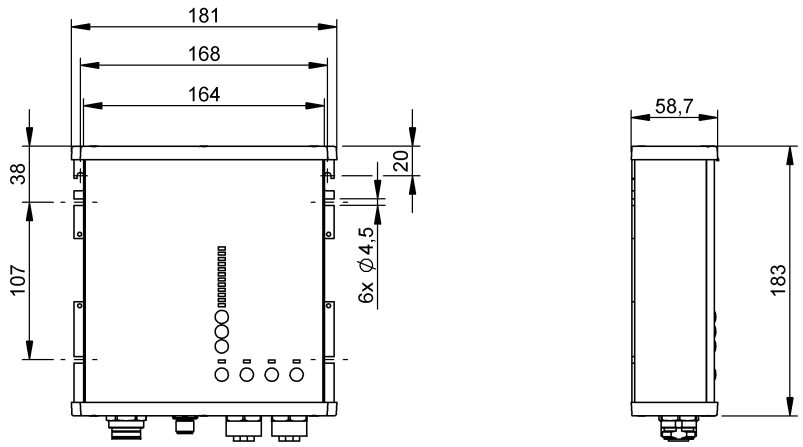

Basic features

Approval/Conformity	CE UKCA cULus WEEE
Short description	Switching power supply

Electrical connection

Connection	M12x1, A-coded
Connection (supply voltage IN)	7/8"-Male, 3-pin
Connection (supply voltage OUT)	7/8"x2-Female
Connector supply voltage IN, number of pins	3
Connector supply voltage IN, type	Male
Connector supply voltage OUT, style	7/8"x2
Connector supply voltage OUT, type	Female
Interconnected operation type	Parallel wiring: not possible

Electrical data

Derating	-6 W/°C > +45 °C -10 W/°C > +55 °C
Display	Status (On/Off, Input failure, Hiccup mode, Overtemp.) Selected output Loadlevel Trip current
Efficiency typ.	95.7 %
Hold-up time	44 ms
Input voltage	85...264 V AC
Inrush current	2.6 / 6 A peak at 120 / 230 V AC
Output capacity max.	360 W
Output voltage	24 - 28 V DC
Power boost	165 %
Power boost, duration max.	5 s
Protection class	I (IEC 61140)
Rated output current	15 A
Switching frequency	PFC converter: 20 kHz to 135 kHz Main converter: 60 kHz to 140 kHz Auxiliary converter: 54 kHz to 66 kHz
Turn-on time max.	1 s

Switching Power Supplies

BAE PS-XA-1W-24-150-608-I
Order Code: BAE012M

Environmental conditions

Ambient temperature	-25...70 °C
Contamination scale	3
Cooling	Free convection
EN 60068-2-27, Shock	30 g, 6 ms 20 g, 11 ms 3 bumps / direction, 18 bumps in total
EN 60068-2-6, Vibration	2...17.8 Hz: ± 1.6 mm 17.8...500 Hz: 2 g 2 hours / axis
IP rating	IP67/IP65
Relative humidity	5...95 %
Storage temperature	-40...85 °C

Functional safety

MTTF (40 °C)	44 a

IO-Link

IO-Link Profil IDs	0x4000 Identification and Diagnosis

Interface

Interface	IO-Link 1.1

Material

Housing material	Aluminum PET

Mechanical data

Dimension	181 x 59 x 183 mm
Mounting part	Flange mounting

Remarks

All parameters are specified at 24 V, 12.5 A, 230 V AC, 25°C ambient and after a 5 minutes run-in time unless otherwise noted.

For more information about MTTF and B10d see MTTF / B10d Certificate

Indication of the MTTF- / B10d value does not represent a binding composition and/or life expectancy assurance; these are simply experiential values with no warranty implications. These declared values also do not extend the expiration period for defect claims or affect it in any way.

Connector Drawings

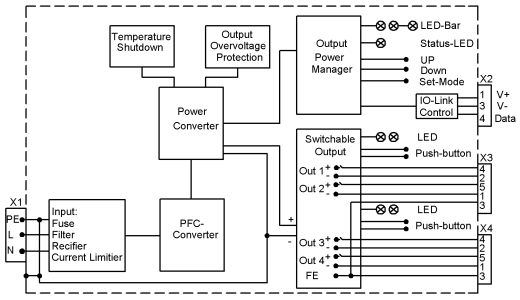

Warning Symbols

