Single-Ended Cordsets

BCC M425-0000-1A-012-PX6234-200
Order Code: BCC0E4C

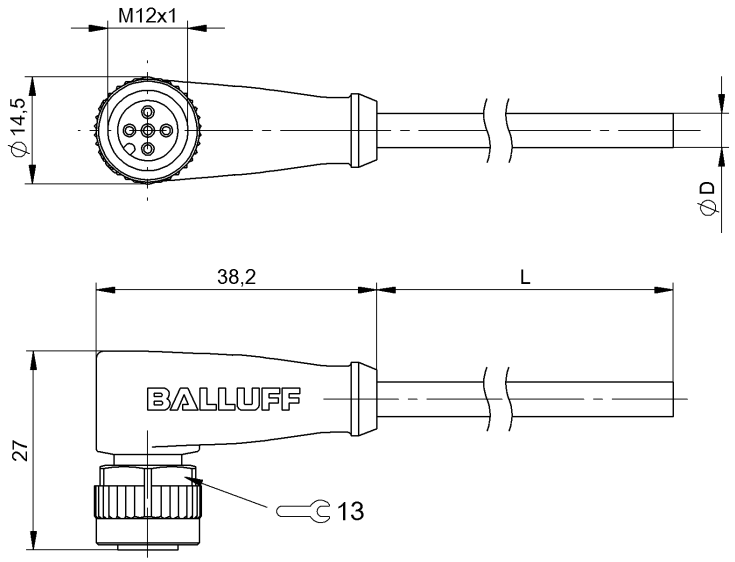

Basic features

Approval/Conformity	CE cULus WEEE

Electrical connection

Bending radius min., fixed cable	3 x D
Bending radius min., flexible cable	10 x D
Cable	PUR blue, 20 m
Cable diameter D	4.50 mm ±0.20 mm
Conductor cross-section	0.34 mm²
Connection	M12x1-Female, angled, 5-pin, A-coded
Connector configuration	right-angle
Number of conductors	2
Number of pins	5
System	Molded

Electrical data

Line capacitance	105 pF/m
Line inductance	1 mH/km
Operating voltage Ub	250 VDC / 250 VAC
Rated current (40 °C)	4.0 A

Environmental conditions

Cable temperature, fixed routing	-25...80 °C
Cable temperature, flexible routing	-5...80 °C
IP rating	IP67, IP68, IP69K

Material

Cable jacket, material	PUR
Material contact carrier	PUR
Material contacts	Brass, gold plated
Material cover nut	Die-cast zinc nickel-plated
Material grip	PUR

Mechanical data

Cable jacket, color	blue
Cable length L	20.00 m
Tightening torque	0.6 Nm

Remarks

Flame resistant per IEC 60332-2, (DIN EN 60332-2)
Enclosure rating per IEC 60529 or 20653, only in screwed state with the associated mating piece.
The selection of accessories suitable for the application and their installation is always the responsibility of the operator of the system.

BCC M425-0000-1A-012-PX6234-200
Order Code: BCC0E4C

Connector Drawings

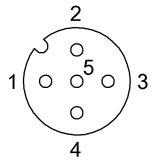

PIN 1: brown

PIN 2: blue

Wiring Diagrams (Schematic)

