Capacitive Sensors

BCS R08RRE-PIC12C-BP00,3-GS04
Order Code: BCS01CP

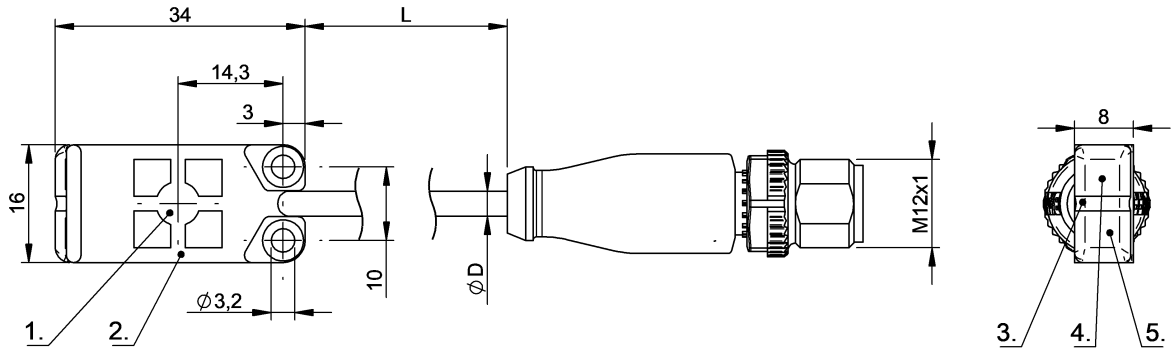

1) Sensing surface, 2) Housing, 3) Cover, 4) Power indicator green, 5) Function indicator yellow

Basic features

Approval/Conformity	CE cULus WEEE UKCA
Basic standard	IEC 60947-5-2
Scope of delivery	Installation guide
Sensitivity	Switching distance teachable
Series	R08

Display/Operation

Function indicator	yes
Power indicator	yes
Setting	IO-Link

Electrical connection

Cable diameter D	3.4 mm
Cable length L	0.3 m
Conductor cross-section	0.14 mm²
Number of conductors	4
Polarity reversal protected	yes
Protection against device mix-ups	yes
Short-circuit protection	yes

Electrical data

Load capacitance max. at Ue	1 nF
No-load current Io max. at Ue	20 mA
Operating voltage Ub	18...30 VDC
Rated insulation voltage Ui	75 V DC
Rated operating current Ie	100 mA
Rated operating voltage Ue DC	24 V
Ready delay tv max.	200 ms
Ripple max. (% of Ue)	10 %
Switching frequency	50 Hz
Utilization category	DC -13
Voltage drop static max.	1.5 V

Environmental conditions

Ambient temperature	-25...80 °C
Contamination scale	1
IP rating	IP65

Functional safety

MTTF (40 °C)	98 a

Capacitive Sensors

BCS R08RRE-PIC12C-BP00,3-GS04
Order Code: BCS01CP

IO-Link

IO-Link Profil IDs	0x000E SSP 2.7 0x0030 BLOB 0x0031 BLOB FW-Update 0x4000 Identification and Diagnosis
IO-Link function classes	0x8000 Device Identification 0x8006 Adjustable Switching Signal Channel 0x8007 Single Value Teach 0x8008 Two Value Teach 0x8009 Dynamic Teach 0x800D Multiple Adjustable Switching Signal Channel 0x8010 Multi Teach Single Value 0x8011 Multi Teach Two Value 0x8012 Multi Teach Dynamic
Supported IO-Link Profiles	Smart Sensor Profile - Adjustable Switching Sensor Common Profile FW-Update Profile

Interface

Cycle time min.	5 ms
Interface	IO-Link-Device 1.1.3
Process data OUT	1 byte 17 bytes 3 bytes
Switching output	Push-Pull/IO-Link NO(PNP)/ NC(NPN) Programmable

Material

Cover material	PP
Material jacket	PUR
Material sensing surface	PP

Mechanical data

Dimension	34 x 16 x 8 mm
Installation	for flush mounting
Size	Block style
Tightening torque	0.2 Nm

Range/Distance

Hysteresis H max. (% of Sr)	15 %
Measuring range	0.5...12 mm
Real switching distance sr	12 mm
Repeat accuracy max. (% of Sr)	2 %
Temperature drift max. (% of Sr)	20 %

Remarks

Input DI can be used for teaching the switching point. In normal operation input DI should be connected continuously to L-.
The push-pull switching outputs must not be connected in parallel.
For more information about MTTF and B10d see MTTF / B10d Certificate

Indication of the MTTF- / B10d value does not represent a binding composition and/or life expectancy assurance; these are simply experiential values with no warranty implications. These declared values also do not extend the expiration period for defect claims or affect it in any way.

Connector Drawings

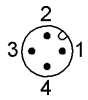

Wiring Diagrams (Schematic)

