Magnetic Sensors

BMF 235K-H-PI-C-A8-S4-00,3
Order Code: BMF00LC

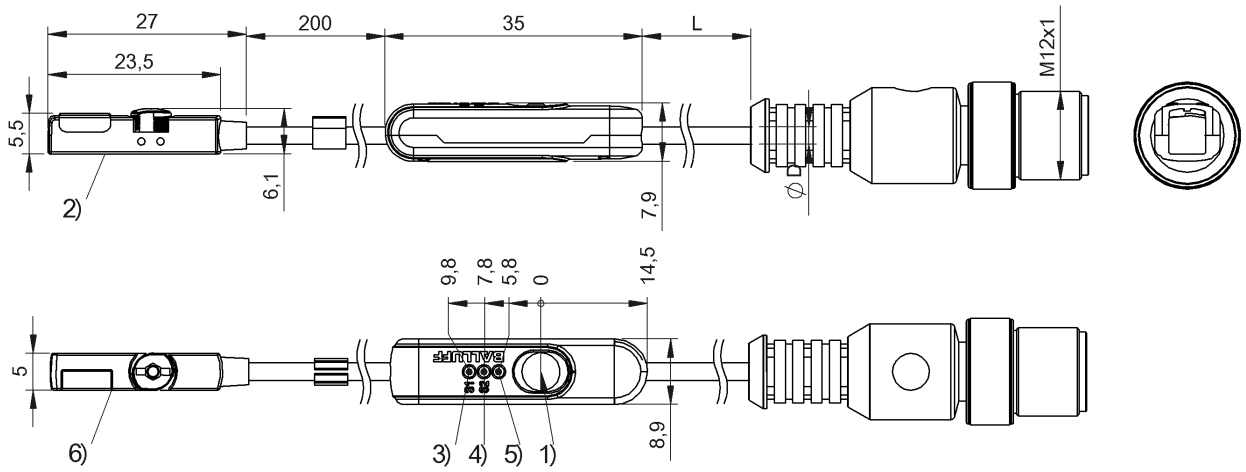

1) Teach-In button, 2) Sensing surface, 3) Output 1 active, 4) Output 2 active, 5) LED Power, 6) Null point

Basic features

Application	Pneumatic cylinder with T-slot. For dimensions, see sketch in product view.
Approval/Conformity	CE UKCA cULus WEEE
Basic standard	IEC 60947-5-2
Not incl. in scope of delivery	Offset screwdriver
Operating mode	IO-Link SIO Mode
Principle of operation	Magnetic field sensor
Scope of delivery	Cable clip for T-slot
Teach function	8 switching points

Display/Operation

Function indicator	yes
Power indicator	yes

Electrical connection

Cable diameter D	2.40 mm
Cable jacket, material	PUR
Cable length L	0.30 m
Connection	M12x1-Male, 4-pin, A-coded
Polarity reversal protected	yes
Protection against device mix-ups	yes
Short-circuit protection	yes

Electrical data

Load capacitance max. at Ue	0.02 µF
No-load current Io max., undamped	10 mA
Operating voltage Ub	10...30 VDC
Rated insulation voltage Ui	75 V DC
Rated operating current Ie	100 mA
Rated operating voltage Ue DC	24 V
Rated short circuit current	100 A
Residual current Ir max.	10 µA
Ripple max. (% of Ue)	15 %
Turn-off delay toff max.	25 ms
Turn-on delay ton max.	25 ms
Utilization category	DC -13
Voltage drop static max.	1.5 V

Environmental conditions

Ambient temperature	-25...80 °C
Contamination scale	3
EN 60068-2-27, Shock	Half-sinus, 30 g_n, 11 ms
EN 60068-2-6, Vibration	55 Hz, amplitude 1 mm, 3x30 min
ESD	2A (4 kV)
Emission	Group 1, Class B
IP rating	IP67

Functional safety

MTTF (40 °C)	320 a

BMF 235K-H-PI-C-A8-S4-00,3
Order Code: BMF00LC

IO-Link

IO-Link Profil IDs	0x0001 SSP0

Interface

Baud rate	COM2 (38.4 kBaud)
Interface	IO-Link 1.1
Interface setting option	Normally open/Normally closed Teach-In of switchpoints Hyst. (overtravel) /10 levels Factory setting Reset
Process data IN	8 switchpoints active/inactive Inside/outside the measuring range Teaching active/inactive
Process data OUT	None
Process data cycle min.	2.6 ms
SIO mode	yes

Material

Clamping screw material	Bronze
Housing material	PA 12
Material jacket	PUR
Material sensing surface	PA 12

Mechanical data

Dimension	23.5 x 6.2 x 5 mm
Mounting part	can be installed in T-slot from above
Tightening torque clamping screw	0.4 Nm

Range/Distance

Repeatability	0.2 mm
Teach range	-30...30 mm
Teach range max.	30 mm
Teach range min.	-30 mm

Remarks

Please refer to manual at balluff.com.
Effective operating current Ie for thermally coupled installation of operating part on metal.
Teach-In must be performed only when installed.
Do not press key using a pointed tool.
The sensor is functional again after the overload has been eliminated.
For more information about MTTF and B10d see MTTF / B10d Certificate

Indication of the MTTF- / B10d value does not represent a binding composition and/or life expectancy assurance; these are simply experiential values with no warranty implications. These declared values also do not extend the expiration period for defect claims or affect it in any way.

Connector Drawings



Wiring Diagrams (Schematic)

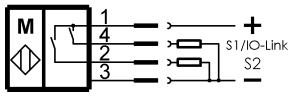

Help Views

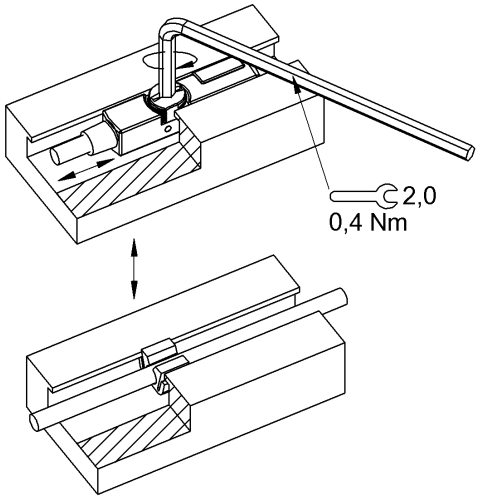

2)

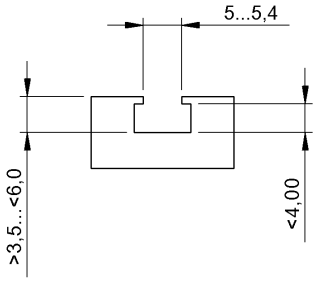

Innensechskantschlüssel 2,0 mm: max.
Anzugsmoment 0,4 Nm
Schraubendreher 4x0,8 mm: max.
Anzugsmoment 0,4 Nm