Photoelectric Sensors

BOD 21M-LBI05-S4
Order Code: BOD002L

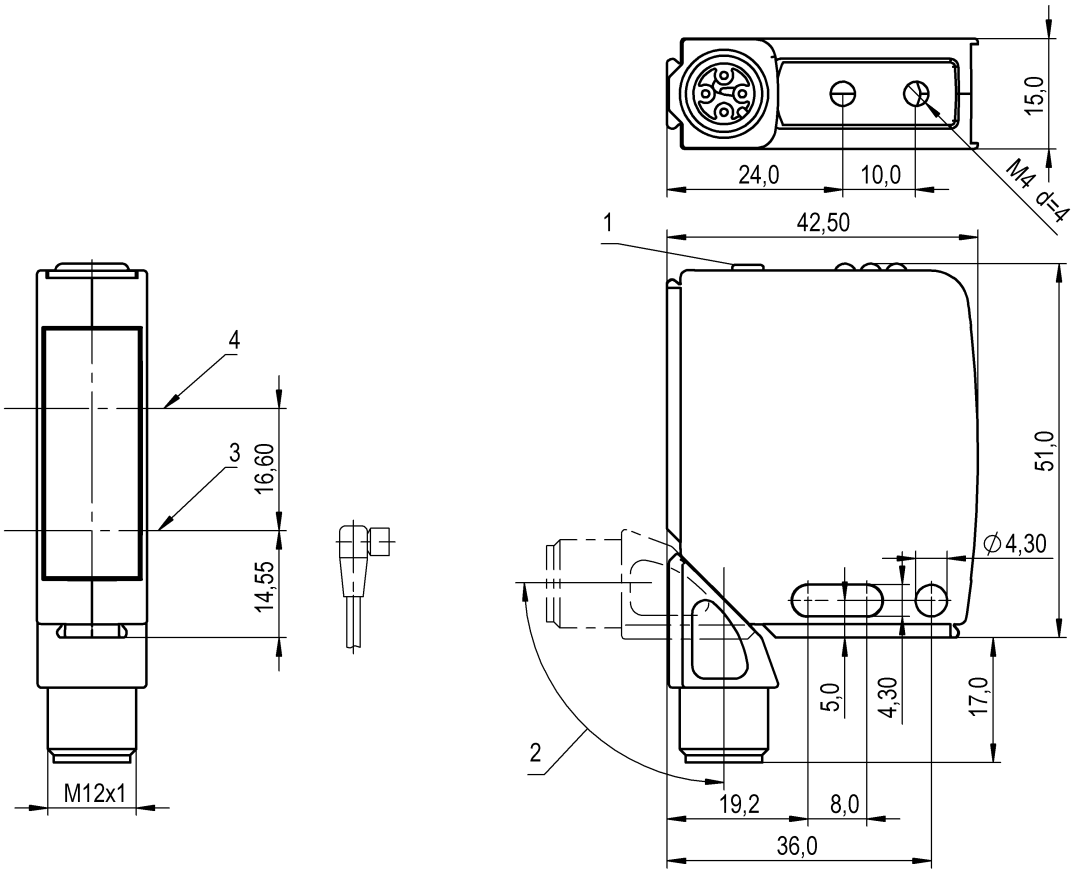

1) Display and control panel, 2) rotatable 270°, 3) Optical axis emitter, 4) Optical axis receiver

Basic features

Additional features	Operating hours counter Count function Darkness measurement
Approval/Conformity	CE UKCA cULus IO-Link WEEE
Basic standard	IEC 60947-5-2, IEC 60947-5-7
Operating mode	SIO Mode IO-Link Mode
Principle of operation	Photoelectric distance sensor
Series	21M
Style	Square Connection can be rotated

Display/Operation

Adjuster	button
Display	Run - LED green Communication - Green LED, flashing Output function- LED yellow Error - LED red
Power indicator	LED green
Setting	Switching or analog

Electrical connection

Connection	Connector, M12x1-Male, 4-pin
Contact, surface protection	Gold plated
Polarity reversal protected	yes
Protection against device mix-ups	yes
Short-circuit protection	yes

Photoelectric Sensors

BOD 21M-LBI05-S4
Order Code: BOD002L

Electrical data

Input frequency of count function max.	250 Hz
Input function	Reset counter
Load capacitance max. at Ue	0.11 µF
Load resistance RL max. (Analog I)	500 ohms
No-load current Io max. at Ue	40 mA
Operating voltage Ub	15...30 VDC
Protection class	II
Rated insulation voltage Ui	250 V AC
Rated operating current Ie	100 mA
Rated operating voltage Ue DC	24 V
Ready delay tv max.	50 ms
Ripple max. (% of Ue)	10 %
Start-up delay for counter	0…255 s
Switching frequency	250 Hz (SIO mode)
Turn-off delay toff max.	2 ms
Turn-on delay ton max.	2 ms
Utilization category	DC -13
Voltage drop Ud max. at Ie	1 V

Environmental conditions

Ambient temperature	-10...70 °C
Contamination scale	3
EN 60068-2-27, Shock	Half-sinus, 30 g_n, 11 ms, 3x6
EN 60068-2-6, Vibration	10…55 Hz, amplitude 0.5 mm, 3x30 min
IP rating	IP67

Functional safety

MTTF (40 °C)	226 a

IO-Link

IO-Link Profil IDs	0x0001 SSP0

Interface

Analog output	Analog, current 4…20 mA
Baud rate	38.4 kBaud
Duration of time function	0…65535 ms
Function class, smart sensor	Identification Teach channel Switching signal channel Variable process data Diagnostics
Interface	IO-Link 1.1
Interface setting option	Operating mode Teach-In switchpoint/window Principle of background assessment Switching output Switching function Hysteresis Time function Count function Data retention active/inactive Dark measurement active/inactive Emitter on/off Key disable on/off Factory setting (Reset) for more information refer to user's guide
Output characteristic	linear rising/falling
Process data IN	1 byte
Process data OUT	5 bytes
Process data cycle min.	6.4 ms
Profile	Smart Sensor
Switching output	2x PNP/NPN NO/NC programmable
Time function	Single pulse Turn-on delay switch-off delay On/off delay

Material

Housing material	Zinc, Die casting, Painted Aluminum, Glass, PMMA, black
Housing material, surface protection	Painted
Material sensing surface	Glass, anti-glare
Surface protection	Powder coated

Mechanical data

Dimension	15 x 51 x 42.5 mm
Distance deviation 6 % max. (% of Sr)	4 %
Mounting part	Screw M4

BOD 21M-LBI05-S4
Order Code: BOD002L

Optical features

Ambient light max.	10000 Lux
Average power Po max.	260 µW
Beam characteristic	Focus, typical at 400 mm
Laser class per IEC 60825-1	1
Light spot size	1.5 x 0.5 mm at 200 mm
Light type	Laser red light
Principle of optical operation	Triangulation
Pulse duration t max.	100 µs
Pulse frequency	0.5 kHz
Pulse power Pp max.	5.2 mW
Special optical feature	Background suppression CCD technology
Switching function, optical	Light/dark switching
Wave length	655 nm

Range/Distance

Accuracy	±1 mm max. (30...170 mm) ±3 mm max. (170...200 mm)
Distance deviation 18 % max. (% of Sr)	typ. 1 %
Non-linearity max.	±1.5 mm max. (30...170 mm) ± 3 mm max. (170...200 mm)
Range	30...200 mm, adjustable
Rated operating distance Sn	200 mm, Adjustable
Repeat accuracy	≤ ± 0.25 mm
Resolution	≤ 10 µm typ. (30...170 mm) 100 µm typ. (170...200 mm)

Remarks

The sensor is functional again after the overload has been eliminated.
Order accessories separately.
For additional information, refer to user's guide.
Reference object (target) for diffuse sensor: gray card, 200 x 200, 90 % remission, axial approach.
For more information about MTTF and B10d see MTTF / B10d Certificate

Indication of the MTTF- / B10d value does not represent a binding composition and/or life expectancy assurance; these are simply experiential values with no warranty implications. These declared values also do not extend the expiration period for defect claims or affect it in any way.

Connector Drawings



Wiring Diagrams (Schematic)

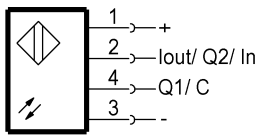

Help Views

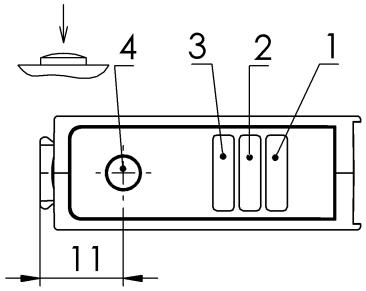

1) Output function
2) Power/short-circuit
3) Error, setup mode active.
4) Sn

Opto Symbols



Warning Symbols

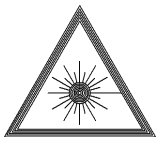

LASER CLASS 1 per IEC 60825-1: 2014-05