Pressure Sensors

BSP B400-EV009-P00S2B-S4
Order Code: BSP00YH

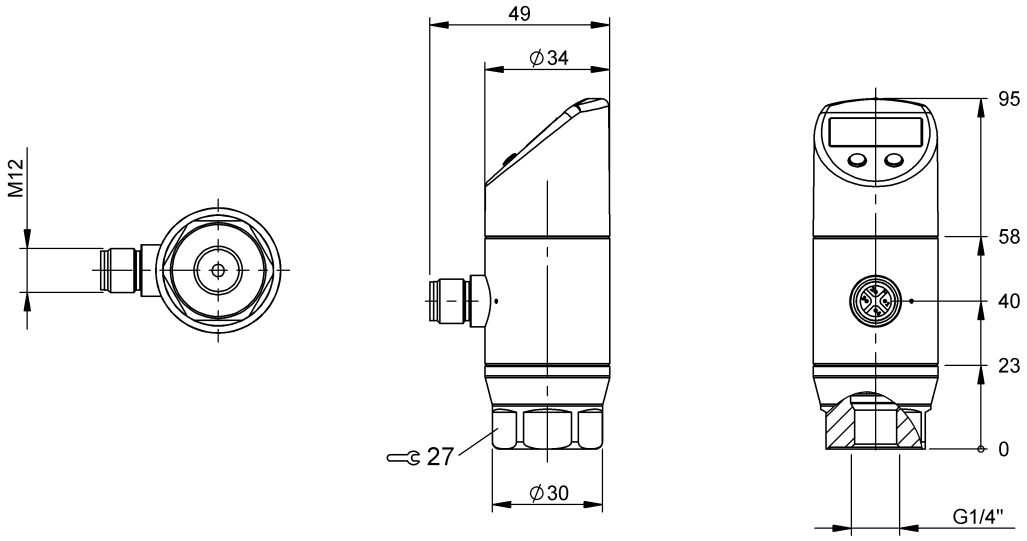

1) Display and control panel, 2) Process connection, 3) Housing rotatable 320°

Basic features

Approval/Conformity	CE UKCA cULus WEEE
Operating panel	2 buttons 320° rotation 4-digit,7-segment display, red

Display/Operation

Switching function display	LED

Electrical connection

Connection	M12x1-Male, 4-pin, A-coded
Polarity reversal protected	yes
Short-circuit protection	yes

Electrical data

Current draw max.	50 mA
Load cycles	100 mil.
Operating voltage Ub	18...30 VDC
Output current max.	150 mA
Protection class	III
Switching cycles min.	100 mil.
Switching frequency	170 Hz

Environmental conditions

Ambient temperature	-40...85 °C
Compensation temperature	-25...85 °C
EN 60068-2-27, Shock	30 g, 11 ms
EN 60068-2-6, Vibration	30 g, 10…2000 Hz
IP rating	IP67, when threaded in
Interference immunity	EN 61326-1:2013 EN 61326-2-3: 2013
Media temperature	-40...125 °C
Noise emission	EN 61326-1:2013 EN 61326-2-3: 2013
Storage temperature	-40...85 °C
Temperature coefficient typ.	≤ ±0.3 % FSO/10K

Functional safety

MTTF (40 °C)	267 a

IO-Link

IO-Link Profil IDs	0x0001 SSP0

Interface

Analog output	Analog, voltage/Analog, current selectable 4…20 mA/0…10 V
Interface	IO-Link 1.1
Switching output	2x PNP/NPN NO/NC selectable

Pressure Sensors

BSP B400-EV009-P00S2B-S4
Order Code: BSP00YH

Material

Connector housing, material	1.4301 stainless steel
Gasket, material	FKM
Housing material	1.4301 stainless steel PE, High-density polyethylene
Measuring cell, material	Ceramic Al2O3
Process connection material	1.4301 stainless steel

Mechanical data

Process connection	G 1/4" (DIN 3852)
Tightening torque max.	5 Nm
Weight	230.00 g

Range/Distance

Accuracy	±0.5 % FSO BFSL
Burst pressure	1000 bar
Long-term stability max.	0.3 % FSO/year
Measuring range	0...400 bar
Overload pressure	650 bar
Repeat accuracy	≤ ± 0.2 % FSO
Resolution	≤ 14 bits
Response time max.	13 ms
Sampling rate	1 ms

Remarks

vacuum-tight

For more information about MTTF and B10d see MTTF / B10d Certificate

Indication of the MTTF- / B10d value does not represent a binding composition and/or life expectancy assurance; these are simply experiential values with no warranty implications. These declared values also do not extend the expiration period for defect claims or affect it in any way.

Connector Drawings

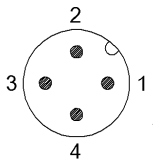

Wiring Diagrams (Schematic)

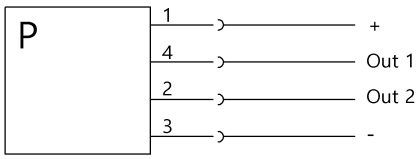

Out 1=PNP/NPN/IO-Link

Out 2=PNP/NPN/4...20 mA/0...10 V